LOCOSYS

LOCOSYS Technology Inc.
20F.-13, No.79, Sec. 1, Xintai 5th Rd.,
Xizhi District, New Taipei City 221, Taiwan
☎ 886-2-8698-3698
886-2-8698-3699
www.locosystech.com

Product name	Description	Version
LS23030-2RE	GPS mouse/ MTK3337E,2m,USB,9600BPS	1.2
LS23032-2RE	GPS mouse/ MTK3337E,2m,PS2,9600BPS	
LS23033-2RE	GPS mouse/ MTK3337E,3m,RJ11,9600BPS	
LS23035-2RE	GPS mouse/ MTK3337E,5m,PS2 with lock,9600BPS	
LS23036-2RE(1)	GPS mouse/ MTK3337E,3m,RJ11,9600BPS	

Note 1: LS23036-2RE is most popular. We recommend customers to use for new design.

Datasheet of GPS mouse, LS2303x-2RE series

1 Introduction

LS2303x-2RE series products are complete GPS receivers (also known as GPS mouse) based on the proven technology found in LOCOSYS GPS module MC-1513-2RE that uses MediaTek latest GPS chip. The GPS mouse will acquire a lot of satellites at a time while providing fast Time-To-First-Fix, one-second navigation update and low power consumption. It can provide you with superior sensitivity and performance even in urban canyon and dense foliage environment. Its far-reaching capability meets the sensitivity requirements of car navigation as well as other location-based applications.

This module supports self-generate orbit prediction, EASY™, to achieve faster cold start and warm start. The EASY™ is no need of both network assistance and host CPU's intervention. The prediction is valid for up to 3 days and updates automatically from time to time when GPS module is powered on and satellites are available.

2 Features

- MediaTek high sensitivity solution
- Support 66-channel GPS
- Low power consumption
- Fast TTFF at low signal level
- Built-in 12 multi-tone active interference canceller
- Up to 10 Hz update rate
- Supports self-generate orbit prediction to achieve faster cold star
- Support Japan QZSS

© 2012 LOCOSYS Technology Inc.

LOCOSYS Technology Inc.
20F.-13, No.79, Sec. 1, Xintai 5th Rd.,
Xizhi District, New Taipei City 221, Taiwan
☎ 886-2-8698-3698
886-2-8698-3699
www.locosystech.com

- Indoor and outdoor multi-path detection and compensation
- Build-in micro battery to reserve system data for rapid satellite acquisition
- LED indicator of GPS positioning status
- Magnet for mounting on the car
- Skid resistant pad on the bottom
- Waterproof

3 Application

- Personal positioning and navigation
- Automotive navigation
- Marine navigation

4 GPS specification

Chip	MediaTek MT3337E	
Frequency	L1 1575.42MHz, C/A code	
Channels	Support 66 channels (22 Tracking, 66 Acquisition)	
Update rate	1Hz default, up to 10Hz	
Acquisition Time	Hot start (Open Sky)	< 1s (typical)
	Cold Start (Open Sky)	33s (typical)
		< 15s (typical) with self-generate orbit prediction
Position Accuracy	Autonomous	3m (2D RMS)
Datum	WGS-84 (default)	
Max. Altitude	< 50,000 m	
Max. Velocity	< 515 m/s	
Protocol	NMEA 0183 ver 3.01	9600 bps (1), 8 data bits, no parity, 1 stop bits 1Hz: GGA, GLL, GSA, GSV, RMC, & VTG

Note 1: Both baud rate and output message rate are changeable by software command

5 Software interface

5.1 NMEA output message

Table 5.1-1 NMEA output message

NMEA record	Description
GGA	Global positioning system fixed data
GLL	Geographic position - latitude/longitude
GSA	GNSS DOP and active satellites
GSV	GNSS satellites in view
RMC	Recommended minimum specific GNSS data
VTG	Course over ground and ground speed

© 2012 LOCOSYS Technology Inc.

LOCOSYS Technology Inc.
20F.-13, No.79, Sec. 1, Xintai 5th Rd.,
Xizhi District, New Taipei City 221, Taiwan
☏ 886-2-8698-3698
886-2-8698-3699
www.locosystech.com

● GGA--- Global Positioning System Fixed Data

Table 5.1-2 contains the values for the following example:

$GPGGA,053740.000,2503.6319,N,12136.0099,E,1,08,1.1,63.8,M,15.2,M,,0000*64

Table5.1- 2 GGA Data Format

Name	**Example**	**Units**	**Description**
Message ID	$GPGGA		GGA protocol header
UTC Time	053740.000		hhmmss.sss
Latitude	2503.6319		ddmm.mmmm
N/S indicator	N		N=north or S=south
Longitude	12136.0099		dddmm.mmmm
E/W Indicator	E		E=east or W=west
Position Fix Indicator	1		See Table 5.1-3
Satellites Used	08		Range 0 to 12
HDOP	1.1		Horizontal Dilution of Precision
MSL Altitude	63.8	mters	
Units	M	mters	
Geoid Separation	15.2	mters	
Units	M	mters	
Age of Diff. Corr.		second	Null fields when DGPS is not used
Diff. Ref. Station ID	0000		
Checksum	*64		
<CR> <LF>			End of message termination

Table 5.1-3 Position Fix Indicators

Value	Description
0	Fix not available or invalid
1	GPS SPS Mode, fix valid
2	Differential GPS, SPS Mode, fix valid
3-5	Not supported
6	Dead Reckoning Mode, fix valid

● GLL--- Geographic Position – Latitude/Longitude

Table 5.1-4 contains the values for the following example:

$GPGLL,2503.6319,N,12136.0099,E,053740.000,A,A*52

Table 5.1-4 GLL Data Format

Name	**Example**	**Units**	**Description**
Message ID	$GPGLL		GLL protocol header

© 2012 LOCOSYS Technology Inc.

LOCOSYS Technology Inc.
20F.-13, No.79, Sec. 1, Xintai 5th Rd.,
Xizhi District, New Taipei City 221, Taiwan
☎ 886-2-8698-3698
886-2-8698-3699
www.locosystech.com

Latitude	2503.6319		ddmm.mmmm
N/S indicator	N		N=north or S=south
Longitude	12136.0099		dddmm.mmmm
E/W indicator	E		E=east or W=west
UTC Time	053740.000		hhmmss.sss
Status	A		A=data valid or V=data not valid
Mode	A		A=autonomous, D=DGPS, E=DR, N=Data not valid, R=Coarse Position, S=Simulator
Checksum	*52		
<CR> <LF>			End of message termination

● GSA---GNSS DOP and Active Satellites

Table 5.1-5 contains the values for the following example:

$GPGSA,A,3,24,07,17,11,28,08,20,04,,,,,2.0,1.1,1.7*35

Table 5.1-5 GSA Data Format

Name	**Example**	**Units**	**Description**
Message ID	$GPGSA		GSA protocol header
Mode 1	A		See Table 5.1-6
Mode 2	3		See Table 5.1-7
ID of satellite used	24		Sv on Channel 1
ID of satellite used	07		Sv on Channel 2
….			….
ID of satellite used			Sv on Channel 12
PDOP	2.0		Position Dilution of Precision
HDOP	1.1		Horizontal Dilution of Precision
VDOP	1.7		Vertical Dilution of Precision
Checksum	*35		
<CR> <LF>			End of message termination

Table 5.1-6 Mode 1

Value	Description
M	Manual- forced to operate in 2D or 3D mode
A	Automatic-allowed to automatically switch 2D/3D

Table 5.1-7 Mode 2

Value	Description
1	Fix not available
2	2D
3	3D

© 2012 LOCOSYS Technology Inc.

LOCOSYS Technology Inc.
20F.-13, No.79, Sec. 1, Xintai 5th Rd.,
Xizhi District, New Taipei City 221, Taiwan
☏ 886-2-8698-3698
886-2-8698-3699
www.locosystech.com

● GSV---GNSS Satellites in View

Table 5.1-8 contains the values for the following example:

$GPGSV,3,1,12,28,81,285,42,24,67,302,46,31,54,354,,20,51,077,46*73

$GPGSV,3,2,12,17,41,328,45,07,32,315,45,04,31,250,40,11,25,046,41*75

$GPGSV,3,3,12,08,22,214,38,27,08,190,16,19,05,092,33,23,04,127,*7B

Table 5.1-8 GSV Data Format

Name	Example	Units	Description
Message ID	$GPGSV		GSV protocol header
Total number of messages[1]	3		Range 1 to 4
Message number[1]	1		Range 1 to 4
Satellites in view	12		
Satellite ID	28		Channel 1 (Range 01 to 196)
Elevation	81	degrees	Channel 1 (Range 00 to 90)
Azimuth	285	degrees	Channel 1 (Range 000 to 359)
SNR (C/No)	42	dB-Hz	Channel 1 (Range 00 to 99, null when not tracking)
Satellite ID	20		Channel 4 (Range 01 to 196)
Elevation	51	degrees	Channel 4 (Range 00 to 90)
Azimuth	077	degrees	Channel 4 (Range 000 to 359)
SNR (C/No)	46	dB-Hz	Channel 4 (Range 00 to 99, null when not tracking)
Checksum	*73		
<CR> <LF>			End of message termination

1. Depending on the number of satellites tracked multiple messages of GSV data may be required.

● RMC---Recommended Minimum Specific GNSS Data

Table 5.1-9 contains the values for the following example:

$GPRMC,053740.000,A,2503.6319,N,12136.0099,E,2.69,79.65,100106,,,A*53

Table 5.1-9 RMC Data Format

Name	Example	Units	Description
Message ID	$GPRMC		RMC protocol header
UTC Time	053740.000		hhmmss.sss
Status	A		A=data valid or V=data not valid
Latitude	2503.6319		ddmm.mmmm
N/S Indicator	N		N=north or S=south
Longitude	12136.0099		dddmm.mmmm
E/W Indicator	E		E=east or W=west
Speed over ground	2.69	knots	True

© 2012 LOCOSYS Technology Inc.

LOCOSYS Technology Inc.
20F.-13, No.79, Sec. 1, Xintai 5th Rd.,
Xizhi District, New Taipei City 221, Taiwan
☏ 886-2-8698-3698
886-2-8698-3699
www.locosystech.com

Course over ground	79.65	degrees	
Date	100106		ddmmyy
Magnetic variation		degrees	
Variation sense			E=east or W=west (Not shown)
Mode	A		A=autonomous, D=DGPS, E=DR, N=Data not valid, R=Coarse Position, S=Simulator
Checksum	*53		
<CR> <LF>			End of message termination

- **VTG---Course Over Ground and Ground Speed**

Table 5.1-10 contains the values for the following example:

$GPVTG,79.65,T,,M,2.69,N,5.0,K,A*38

Table 5.1-10 VTG Data Format

Name	**Example**	**Units**	**Description**
Message ID	$GPVTG		VTG protocol header
Course over ground	79.65	degrees	Measured heading
Reference	T		True
Course over ground		degrees	Measured heading
Reference	M		Magnetic
Speed over ground	2.69	knots	Measured speed
Units	N		Knots
Speed over ground	5.0	km/hr	Measured speed
Units	K		Kilometer per hour
Mode	A		A=autonomous, D=DGPS, E=DR, N=Data not valid, R=Coarse Position, S=Simulator
Checksum	*38		
<CR> <LF>			End of message termination

5.2 Proprietary NMEA input message

Please refer to MTK proprietary message.

5.3 Examples to configure the power saving mode of GPS module

The GPS module supports following power saving modes that user can configure by issuing software commands.

5.3.1 Standby mode

User can issue software command to make GPS module go into standby mode that consumes less than 200uA current. GPS module will be awaked when receiving any byte.

© 2012 LOCOSYS Technology Inc.

LOCOSYS Technology Inc.
20F.-13, No.79, Sec. 1, Xintai 5th Rd.,
Xizhi District, New Taipei City 221, Taiwan
☎ 886-2-8698-3698
886-2-8698-3699
www.locosystech.com

The following flow chart is an example to make GPS module go into standby mode and then wake up.

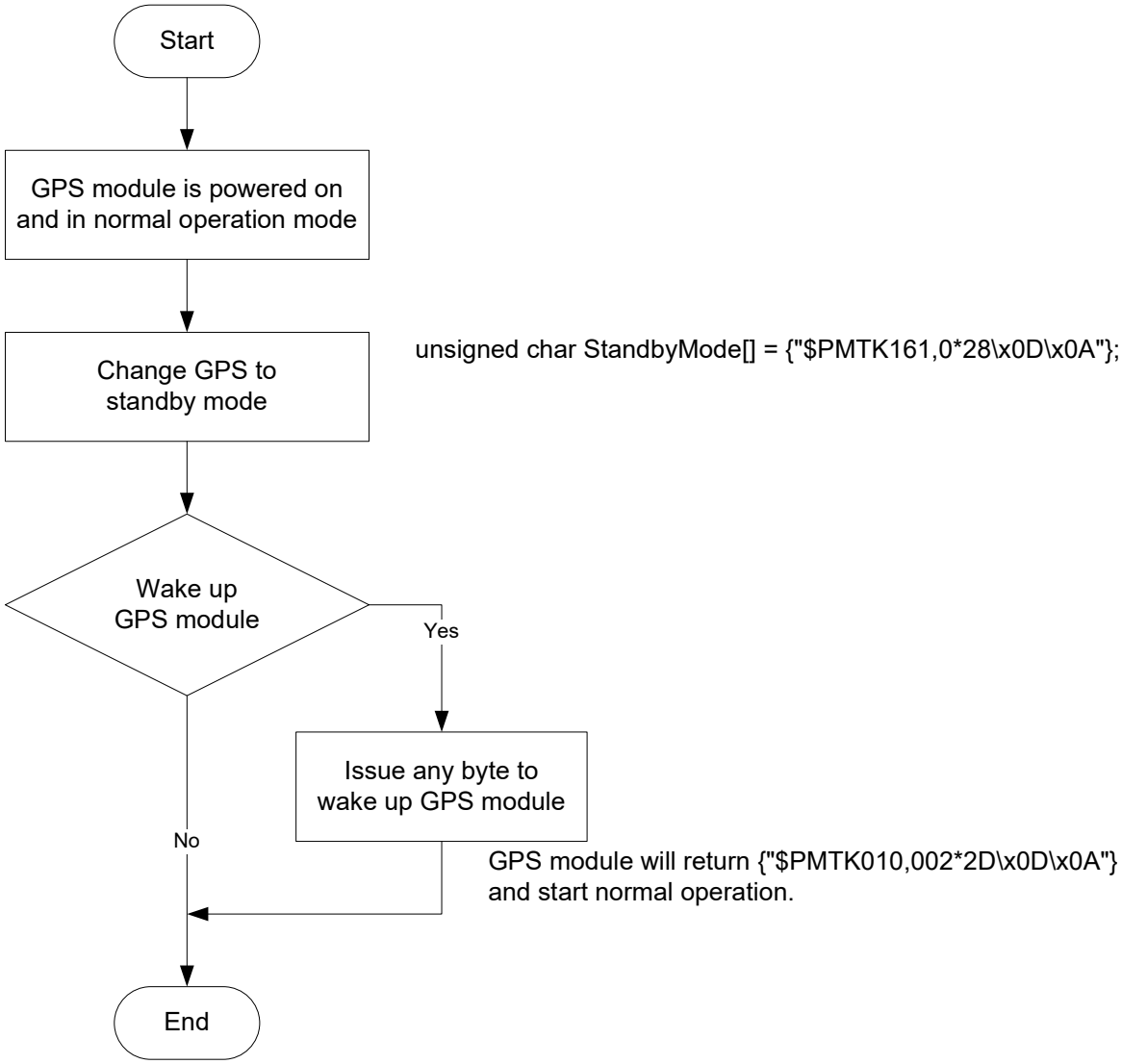

5.4 Examples to configure the update rate of GPS module

The GPS module supports up to 10Hz update rate that user can configure by issuing software commands. Note that the configurations by software commands are stored in the battery-backed SRAM that is powered through VBACKUP pin. Once it drains out, the default/factory settings will be applied.

Due to the transmitting capacity per second of the current baud rate, GPS module has to be changed to higher baud rate for high update rate of position fix. The user can use the following software commands to change baud rate.

Baud rate	Software command
Factory default	$PMTK251,0*28<CR><LF>
4800	$PMTK251,4800*14<CR><LF>

© 2012 LOCOSYS Technology Inc.

LOCOSYS Technology Inc.
20F.-13, No.79, Sec. 1, Xintai 5th Rd.,
Xizhi District, New Taipei City 221, Taiwan
☏ 886-2-8698-3698
886-2-8698-3699
www.locosystech.com

9600	$PMTK251,9600*17<CR><LF>
19200	$PMTK251,19200*22<CR><LF>
38400	$PMTK251,38400*27<CR><LF>
57600	$PMTK251,57600*2C<CR><LF>
115200	$PMTK251,115200*1F<CR><LF>

Note: <CR> means Carriage Return, i.e. 0x0D in hexadecimal. <LF> means Line Feed, i.e. 0x0A in hexadecimal.

If the user does not want to change baud rate, you can reduce the output NMEA sentences by the following software commands.

NMEA sentence	Software command
Factory default	$PMTK314,-1*04<CR><LF>
Only GLL at 1Hz	$PMTK314,1,0,0,0,0,0,0,0,0,0,0,0,0,0,0,0,0,0,0*29<CR><LF>
Only RMC at 1Hz	$PMTK314,0,1,0,0,0,0,0,0,0,0,0,0,0,0,0,0,0,0,0*29<CR><LF>
Only VTG at 1Hz	$PMTK314,0,0,1,0,0,0,0,0,0,0,0,0,0,0,0,0,0,0,0*29<CR><LF>
Only GGA at 1Hz	$PMTK314,0,0,0,1,0,0,0,0,0,0,0,0,0,0,0,0,0,0,0*29<CR><LF>
Only GSA at 1Hz	$PMTK314,0,0,0,0,1,0,0,0,0,0,0,0,0,0,0,0,0,0,0*29<CR><LF>
Only GSV at 1Hz	$PMTK314,0,0,0,0,0,1,0,0,0,0,0,0,0,0,0,0,0,0,0*29<CR><LF>
Only ZDA at 1Hz	$PMTK314,0,0,0,0,0,0,0,0,0,0,0,0,0,0,0,0,0,1,0*29<CR><LF>
RMC, GGA, GSA at 1Hz and GSV at 0.2Hz	$PMTK314,0,1,0,1,1,5,0,0,0,0,0,0,0,0,0,0,0,0,0*2C<CR><LF>
If the command is correct and executed, GPS module will output message $PMTK001,314,3*36<CR><LF>	

After the GPS module is changed to higher baud rate or reduced NMEA sentence, the user can configure it to high update rate of position fix by the following commands.

Interval of position fix	Software command
Every 100ms (10Hz)(1)	$PMTK220,100*2F<CR><LF>
Every 200ms (5Hz)	$PMTK220,200*2C<CR><LF>
Every 500ms (2Hz)	$PMTK220,500*2B<CR><LF>
Every 1000ms (1Hz)	$PMTK220,1000*1F<CR><LF>
Every 2000ms (0.5Hz)(2)	$PMTK220,2000*1C<CR><LF>
If the command is correct and executed, GPS module will output message $PMTK001,220,3*30<CR><LF>	

Note 1: The minimum interval of position fix is 100ms, i.e. the maximum update rate is 10Hz.

© 2012 LOCOSYS Technology Inc.

LOCOSYS Technology Inc.
20F.-13, No.79, Sec. 1, Xintai 5th Rd.,
Xizhi District, New Taipei City 221, Taiwan
☎ 886-2-8698-3698
886-2-8698-3699
www.locosystech.com

Note 2: The current consumption is the same with the update rate of 1Hz.

5.5 Configure the static navigation parameter

The output position of GPS module will keep the same and output speed will be zero if the actual speed is below the threshold of the static navigation parameter. This is useful for different applications. For example, the car stopped at a red light will get stationary GPS position if the threshold is 1.5m/s. It is better to disable this function by setting threshold to 0 for pedestrian navigation. This function is default disabled.

The format of the software command is as below.

$PMTK386,speed threshold*checksum<CR><LF>

The unit of speed threshold is meter per second. The range of speed threshold is from 0.1m/s to 2.0m/s. Value 0 is to disable the function.

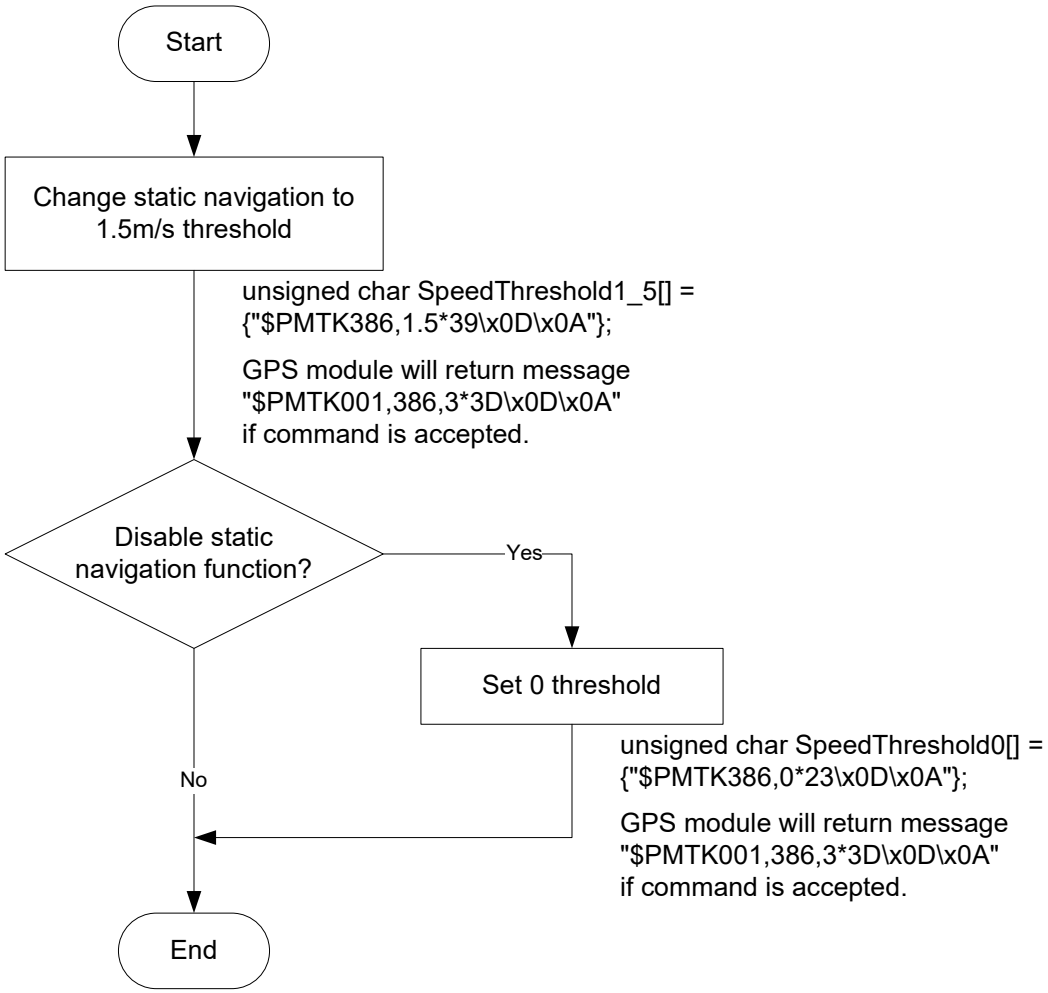

6 LED indicator

The red LED is an indicator of GPS positioning status. In continuous power mode, it flashes once per second when position is fixed. Otherwise it is off. The timing in detail is as below.

© 2012 LOCOSYS Technology Inc.

LOCOSYS Technology Inc.
20F.-13, No.79, Sec. 1, Xintai 5th Rd.,
Xizhi District, New Taipei City 221, Taiwan
☎ 886-2-8698-3698
886-2-8698-3699
www.locosystech.com

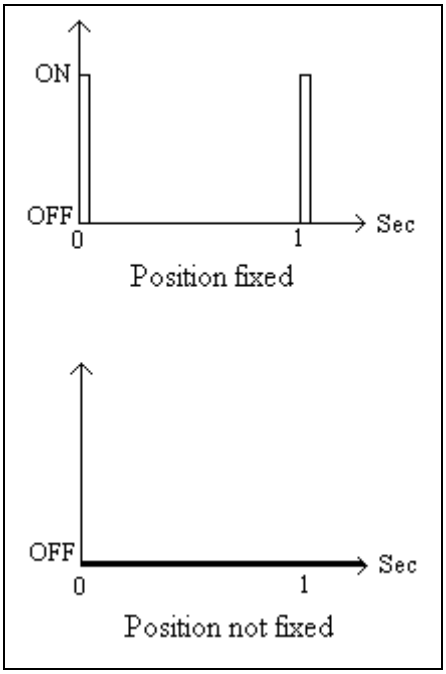

7 Pin assignment and descriptions

- **LS23030-2RE**

Pin #	Name	Type	Description
1	VBUS	P	USB power input
2	D-		D- line
3	D+		D+ line
4	GND	P	Ground

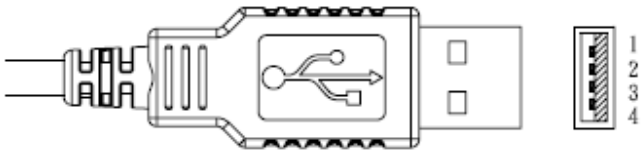

USB A-TYPE Plug

© 2012 LOCOSYS Technology Inc.

LOCOSYS Technology Inc.
20F.-13, No.79, Sec. 1, Xintai 5th Rd.,
Xizhi District, New Taipei City 221, Taiwan
☎ 886-2-8698-3698
886-2-8698-3699
www.locosystech.com

- **LS23032-2RE**

Pin #	Name	Type	Description
1	GND	P	Ground
2	VDD	P	Power input
3	NC		Not connect
4	RX	I	Data input (RS232 level)
5	TX	O	Data output (RS232 level)
6	NC		Not connect

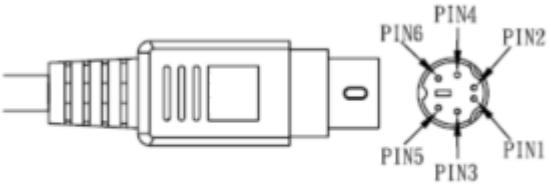

PS2 MALE

- **LS23033-2RE**

Pin #	Name	Type	Description
1	VDD	P	Power input
2	RX	I	Data input (RS232 level)
3	TX	O	Data output (RS232 level)
4	GND	P	Ground
5	NC		Not connect
6	NC		Not connect

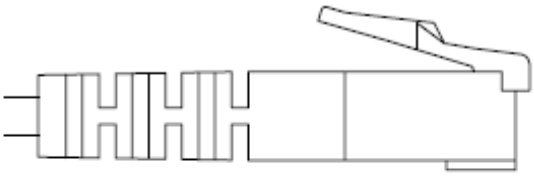

RJ11 MALE

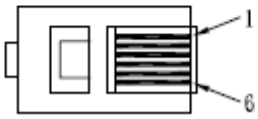

© 2012 LOCOSYS Technology Inc.

LOCOSYS Technology Inc.
20F.-13, No.79, Sec. 1, Xintai 5th Rd.,
Xizhi District, New Taipei City 221, Taiwan
☎ 886-2-8698-3698
886-2-8698-3699
www.locosystech.com

- **LS23035-2RE**

Pin #	Name	Type	Description
1	VDD	P	Power input
2	GND	P	Ground
3	NC		Not connect
4	TX	O	Data output (RS232 level)
5	RX	I	Data input (RS232 level)
6	NC		Not connect

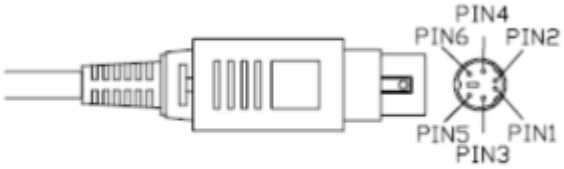

PS2 MALE
with lock

- **LS23036-2RE**

Pin #	Name	Type	Description
1	NC		Not connect
2	GND	P	Ground
3	RX	I	Data input (RS232 level)
4	TX	O	Data output (RS232 level)
5	VDD	P	Power input
6	NC		Not connect

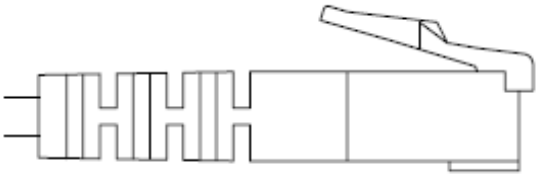

RJ11 MALE

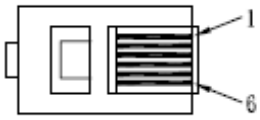

© 2012 LOCOSYS Technology Inc.

LOCOSYS Technology Inc.
20F.-13, No.79, Sec. 1, Xintai 5th Rd.,
Xizhi District, New Taipei City 221, Taiwan
☎ 886-2-8698-3698
886-2-8698-3699
www.locosystech.com

8 DC & Temperature characteristics

8.1 Power consumption (continuous mode)

Parameter	Symbol	Product	Min.	Typ.	Max.	Units
Input voltage	VCC	LS23030-2RE	4.75	5	5.25	V
		LS23032-2RE	4	5	6	
		LS23033-2RE	4	5	6	
		LS23035-2RE	4	5	6	
		LS23036-2RE	4	5	6	
Input current	Icc	LS23030-2RE		30(1)		mA
		LS23032-2RE		20(1)		
		LS23033-2RE		20 (1)		
		LS23035-2RE		20 (1)		
		LS23036-2RE		20 (1)		

1. Measured when position fix (1Hz) is available.

8.2 Temperature characteristics

Parameter	Symbol	Min.	Typ.	Max.	Units
Operating Temperature	Topr	-40	-	85	℃
Storage Temperature	Tstg	-40	25	85	℃

© 2012 LOCOSYS Technology Inc.

LOCOSYS

LOCOSYS Technology Inc.
20F.-13, No.79, Sec. 1, Xintai 5th Rd.,
Xizhi District, New Taipei City 221, Taiwan
☏ 886-2-8698-3698
886-2-8698-3699
www.locosystech.com

9 Mechanical specification

- **LS23030-2RE (USB interface)**

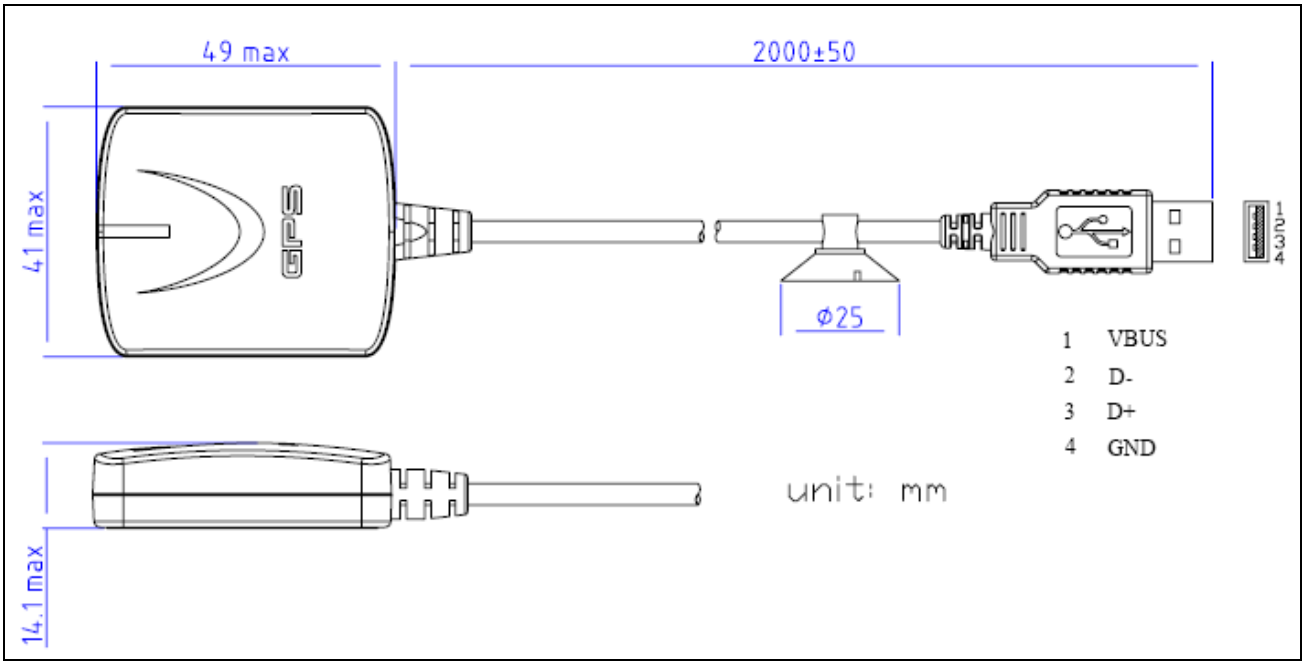

- **LS23032-2RE (RS232 interface)**

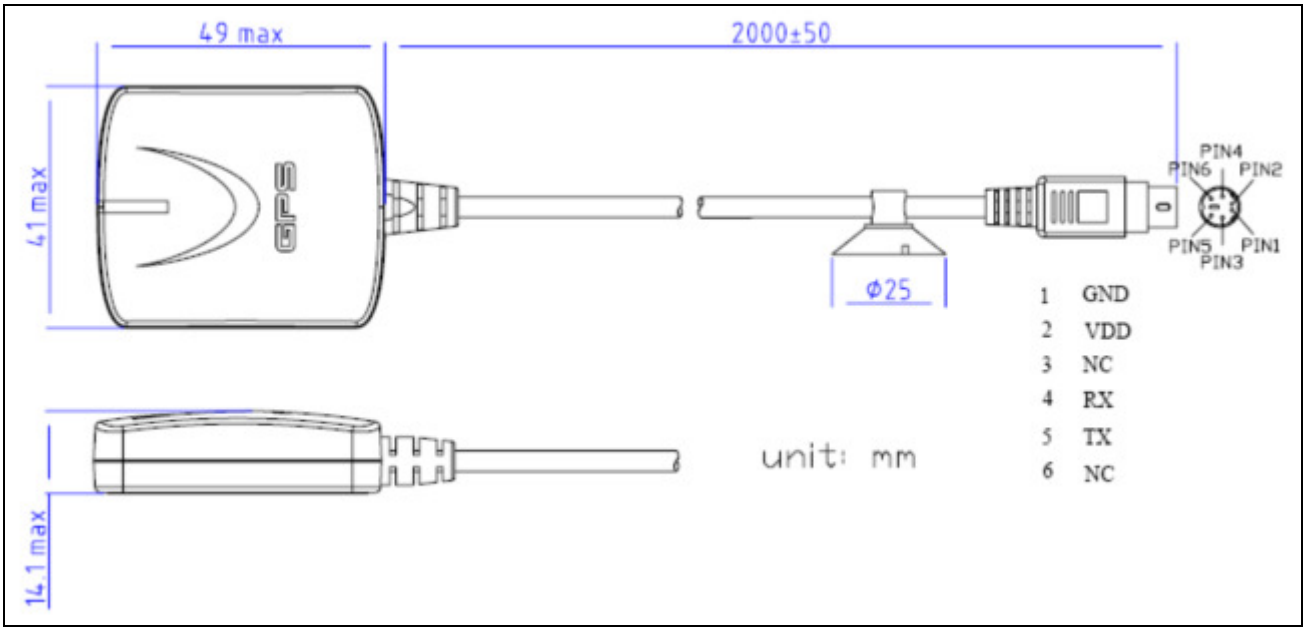

© 2012 LOCOSYS Technology Inc.

LOCOSYS Technology Inc.
20F.-13, No.79, Sec. 1, Xintai 5th Rd.,
Xizhi District, New Taipei City 221, Taiwan
☎ 886-2-8698-3698
886-2-8698-3699
www.locosystech.com

- **LS23033-2RE (RS232 interface)**

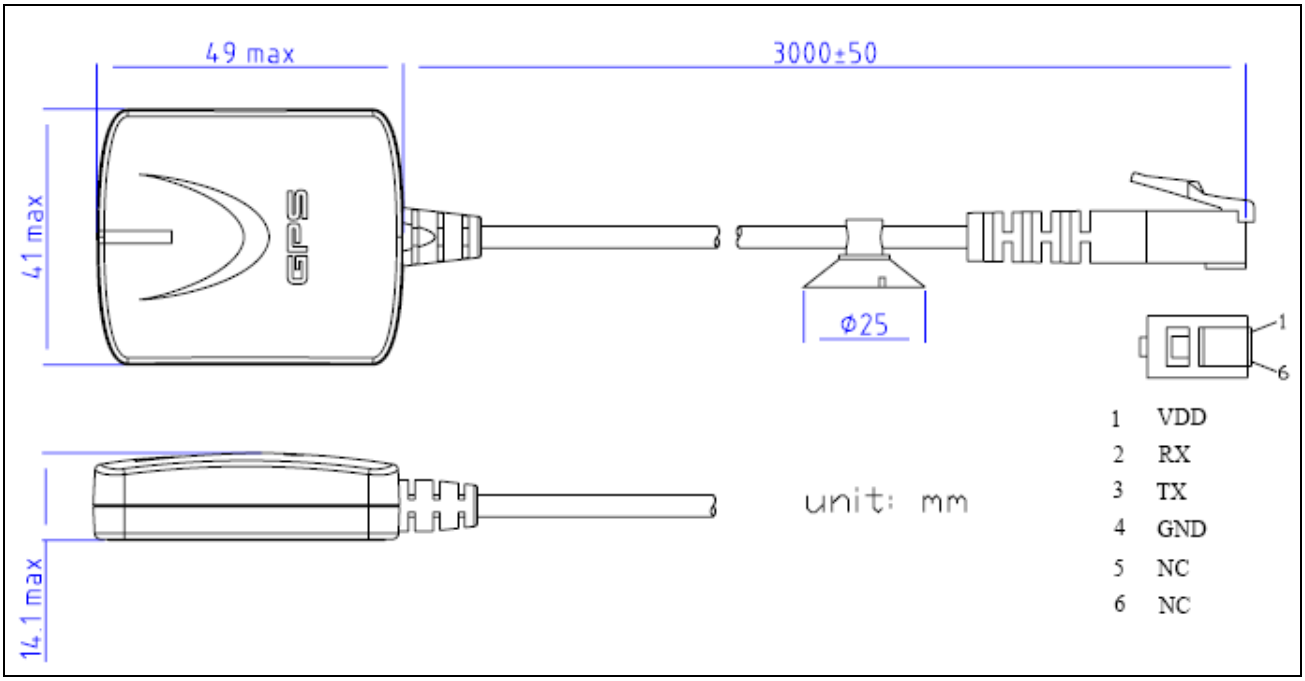

- **LS23035-2RE (RS232 interface)**

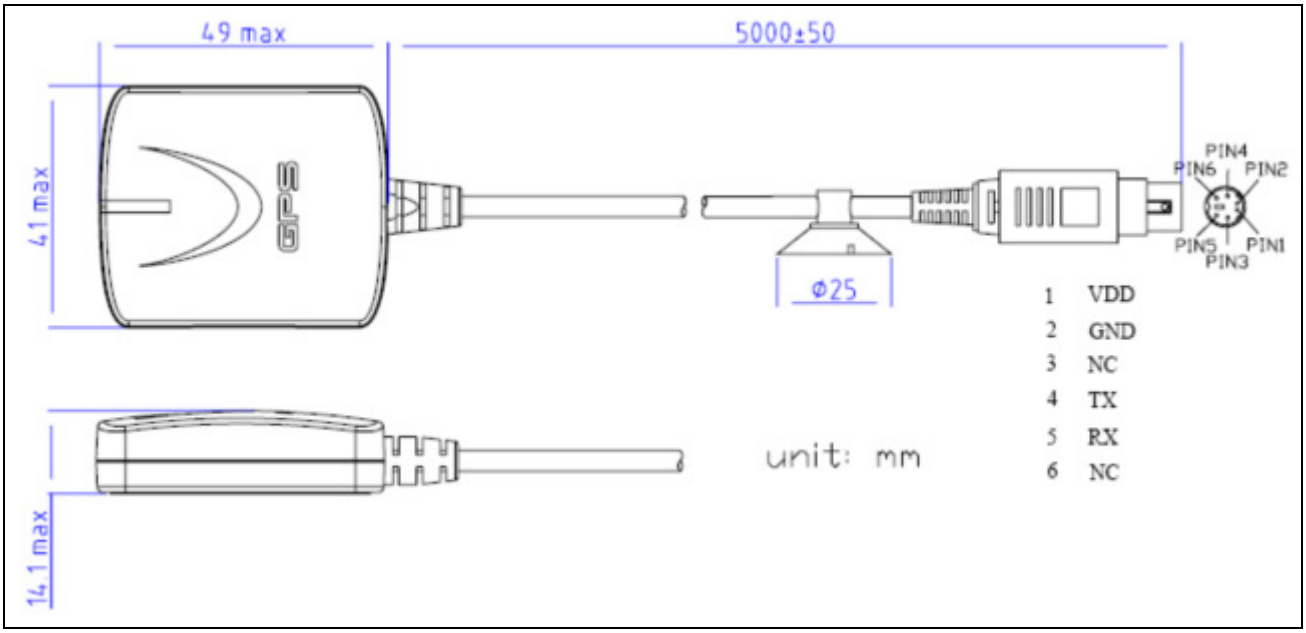

© 2012 LOCOSYS Technology Inc.

LOCOSYS Technology Inc.
20F.-13, No.79, Sec. 1, Xintai 5th Rd.,
Xizhi District, New Taipei City 221, Taiwan
☎ 886-2-8698-3698
886-2-8698-3699
www.locosystech.com

- **LS23036-2RE (RS232 interface)**

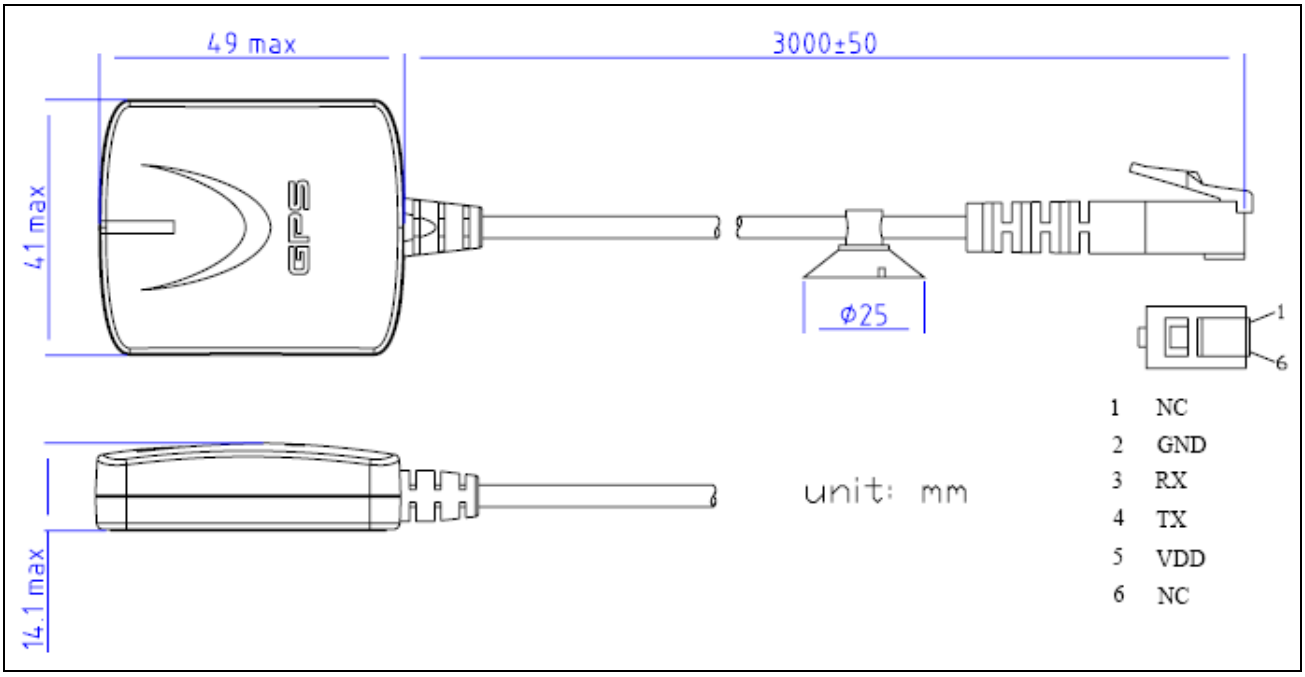

© 2012 LOCOSYS Technology Inc.

LOCOSYS Technology Inc.
20F.-13, No.79, Sec. 1, Xintai 5th Rd.,
Xizhi District, New Taipei City 221, Taiwan
☎ 886-2-8698-3698
886-2-8698-3699
www.locosystech.com

Document change list

Revision 1.0

- First release on September 30, 2013

Revision 1.0 to revision 1.1 (Jul 21, 2015)

- Revised product name from LS2303x-2R to LS2303x-2RE
- Revised module from MC-1513-2R to MC-1513-2RE
- Revised chip from MT3337 to MT3337E
- Added support self-generate orbit prediction to achieve faster cold star feature
- Remove Capable of SBAS (WAAS, EGNOS, MSAS, GAGAN) feature
- Remove Section 5.3.2 Periodic mode feature
- Remove Section 5.3.3 AlwaysLocate™ mode feature

Revision 1.1 to revision 1.2 (October 5, 2018)

- Added alternative cable pictures because the alternative appearance of cable strain relief of connector side has slight differences with original. If customer concerns with this part dimensions, please contact with us in advance.

© 2012 LOCOSYS Technology Inc.