LOCOSYS Technology Inc.
20F.-13, No.79, Sec. 1, Xintai 5th Rd.,
Xizhi District, New Taipei City 221, Taiwan
☏ 886-2-8698-3698
886-2-8698-3699
www.locosystech.com

Commodity Description	Specification
GNSS/RTK ACTIVE ANT/LP-105AR-C	RG174/5M/3~5V/SMA

1. Introduction

The LOCOSYS **LP-105AR-C** multi-band (GPS L1/L5、GLONASS L1OF、BDS B1/B2a、Galileo E1/E5a、QZSS L1/L5、NavIC) active GNSS/RTK antenna is composed of 50*50*6mm laminated 40*40*4mm ceramic dielectric antenna. The compact design, excellent price-to-performance ratio, and versatile mounting choices provide customers with a fast, easy, and reliable multi-band antenna solution. The LP-105AR-C antenna is a perfect match to LOCOSYS RTK series solutions (for example, RTK-1010、RTK-1612、RTK-M300…), supporting L1 and L5 bands.

The LP-105AR-C includes a high-performance multi-band RHCP dual-resonance, dual-feed patch antenna element, a built-in high-gain LNA with SAW pre-filtering, and a 5-meter antenna cable with an SMA connector.

2. Features

- L1 /L5 multi-band active GNSS/RTK antenna for mass-market applications
- Can receive GPS, GLONASS, BeiDou, GALILEO and NavIC satellites
- Suitable for vehicle navigation, Autonomous vehicle, Micro-mobility, Drone/UAV, Precision Agriculture, Robotics
- Enables fast time-to-market
- Multiple mounting options to meet diverse installation needs

© 2022 LOCOSYS Technology Inc.

LOCOSYS

LOCOSYS Technology Inc.
20F.-13, No.79, Sec. 1, Xintai 5th Rd.,
Xizhi District, New Taipei City 221, Taiwan
☏ 886-2-8698-3698
886-2-8698-3699
www.locosystech.com

3. Electrical Specifications

3.1 Patch Antenna Element Electrical Specifications

Characteristics	Specifications	Note
Frequency Range	GPS: L1/L5 GLONASS: L1OF GALILEO: E1/E5a BeiDou: B1/B2a NavIC	
Zenith Gain	≥3.0±0.5dBi	70*70 mm ground plane
VSWR	＜1.5	Center Frequency
Impedance	50Ω	
Polarization	(RHCP)	
Axis Ratio	＜3.0dB	Center Frequency

3.2 LNA

Characteristics	Specifications
LNA Gain	28±3dB
Noise Figure	< 1.5dB
VSWR	< 2.0
Output impedance	50Ω
Pass band Ripple	±1.0 dB (LNA)
LNA Output 1dB Compression Point	＞-10dBm（LNA）
Out of Band Rejection	30dBc min @ fH+50MHz/fL-50MHz
Prime Power	3.0V～5.0V
Operating Current	14mA±2@5V

3.3 Mechanical Specifications

Item	Specifications	Unit
Size	87*65*23	mm
Cable / Connector	RG174 Φ2.8 mm L=5000±100 mm / SMA(M)	-
Weight	179	g
Mounting	Ultrasonic & Screw	-
Housing Color / Material	Black / ABS	-
Waterproof	IPX7	-

© 2022 LOCOSYS Technology Inc.

LOCOSYS Technology Inc.
20F.-13, No.79, Sec. 1, Xintai 5th Rd.,
Xizhi District, New Taipei City 221, Taiwan
☏ 886-2-8698-3698
886-2-8698-3699
www.locosystech.com

3.4 Radiation Inspections

Item	Specifications		Unit
	L1	L5	
Frequency	1575±3MHz	1176.45MHz	MHz
S21	Min. -6.0		dB
Current	13.0~17.0		mA

3.5 Working conditions

Relative Humidity	90%
Operating Temperature	-40～+85℃
Store Temperature	-45～+85℃

4. Antenna Dimensions & Accessories

4.1 Dimensions (Unit : mm)

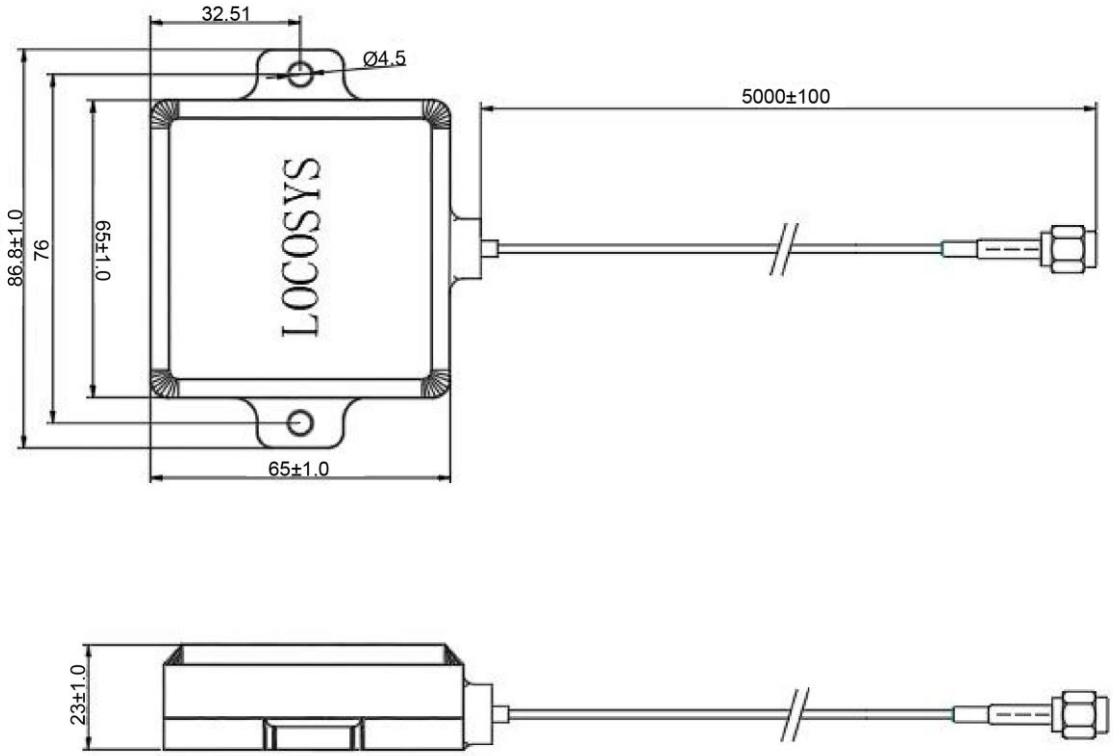

Unmarked tolerance ±1mm

© 2022 LOCOSYS Technology Inc.

LOCOSYS Technology Inc.
20F.-13, No.79, Sec. 1, Xintai 5th Rd.,
Xizhi District, New Taipei City 221, Taiwan
☏ 886-2-8698-3698
886-2-8698-3699
www.locosystech.com

4.2 Accessories

- Screw

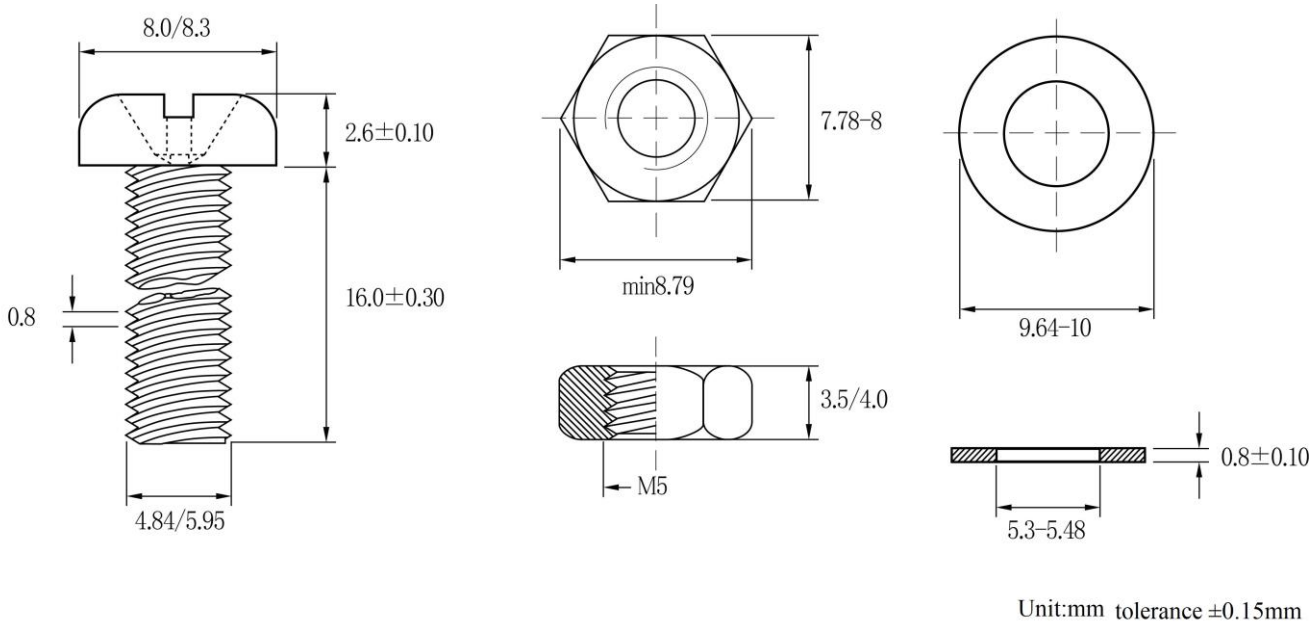

- Double-sided adhesive

© 2022 LOCOSYS Technology Inc.

LOCOSYS Technology Inc.
20F.-13, No.79, Sec. 1, Xintai 5th Rd.,
Xizhi District, New Taipei City 221, Taiwan
☏ 886-2-8698-3698
886-2-8698-3699
www.locosystech.com

5. Packing

1pc per box as below

© 2022 LOCOSYS Technology Inc.

LOCOSYS Technology Inc.
20F.-13, No.79, Sec. 1, Xintai 5th Rd.,
Xizhi District, New Taipei City 221, Taiwan
☏ 886-2-8698-3698
886-2-8698-3699
www.locosystech.com

6. Electrical Characteristics

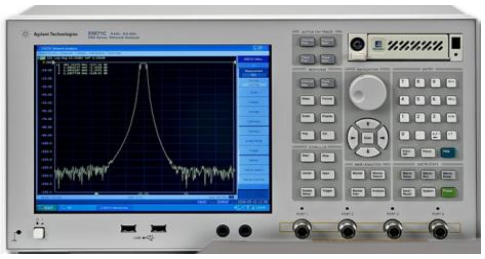

Agilent network analyzer

Test installation diagram

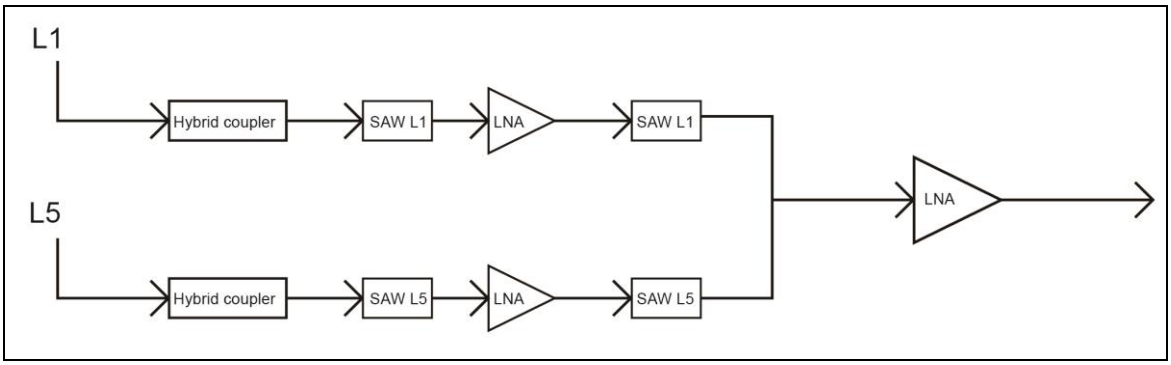

L1/L5 Smith/VSWR

L1 Smith/VSWR	L5 Smith/VSWR
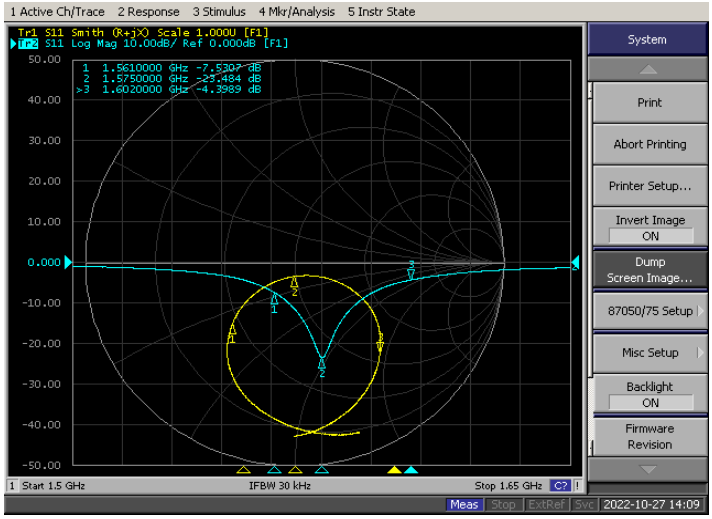	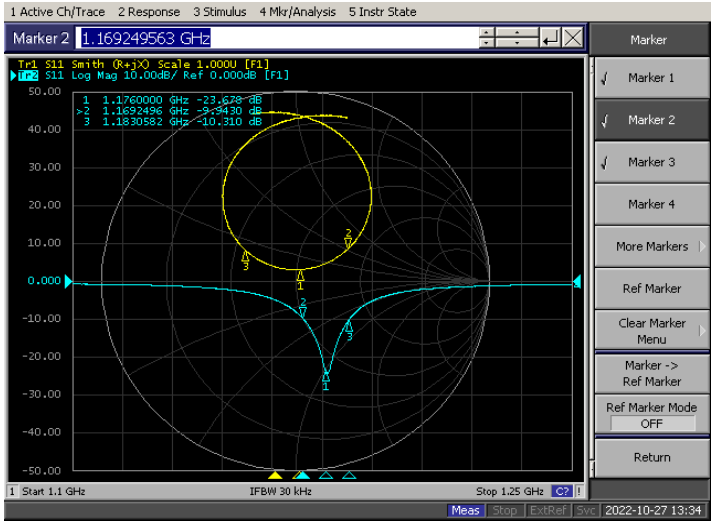

© 2022 LOCOSYS Technology Inc.

LOCOSYS Technology Inc.
20F.-13, No.79, Sec. 1, Xintai 5th Rd.,
Xizhi District, New Taipei City 221, Taiwan
☏ 886-2-8698-3698
886-2-8698-3699
www.locosystech.com

7. Microwave anechoic chamber test data

Test Equipment：ARS 400MHz-40GHz Semi-Anchoic Chamber Test.

Passive testing-1561MHz

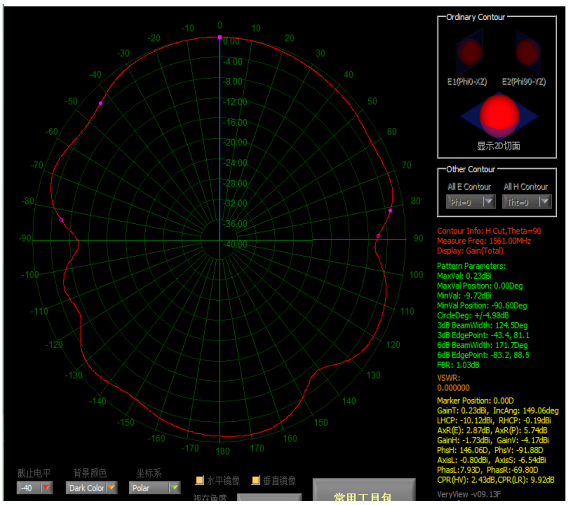

Passive testing-1575MHz

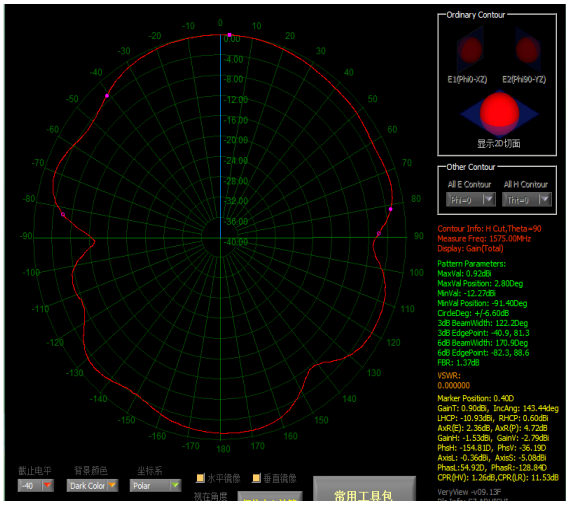

Passive testing-1602MHz

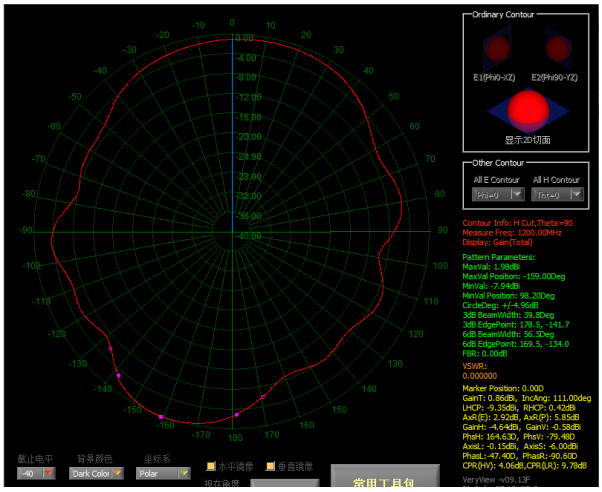

Passive testing-1176MHz

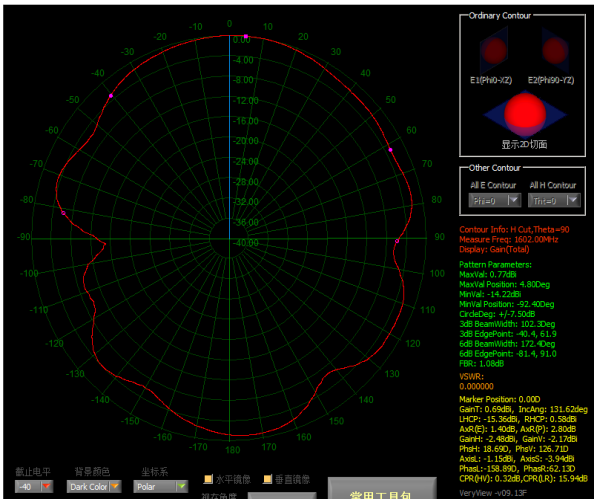

Frequency MHz	1561	1575	1585	1602	1176
Peak Gain dBi	0.23	0.92	1.61	0.77	1.98
Vertex axis ratio dB	2.87	2.36	1.99	1.40	2.92

8. Typical Characteristics

© 2022 LOCOSYS Technology Inc.

LOCOSYS Technology Inc.
20F.-13, No.79, Sec. 1, Xintai 5th Rd.,
Xizhi District, New Taipei City 221, Taiwan
☏ 886-2-8698-3698
886-2-8698-3699
www.locosystech.com

Test condition: Only LNA Circuit, Semi-Ridged SMA Cable, 14mA @ 5V Voltage.

* L1 Band (1559~1606MHz)

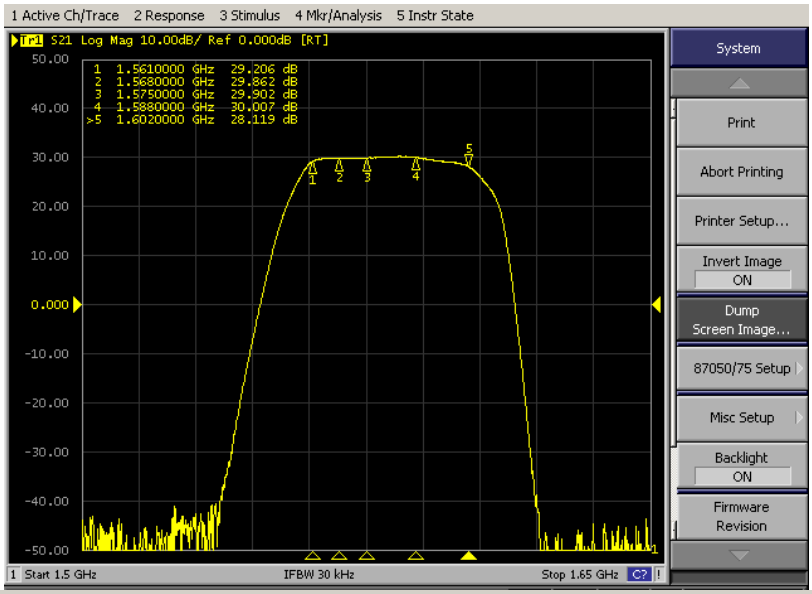

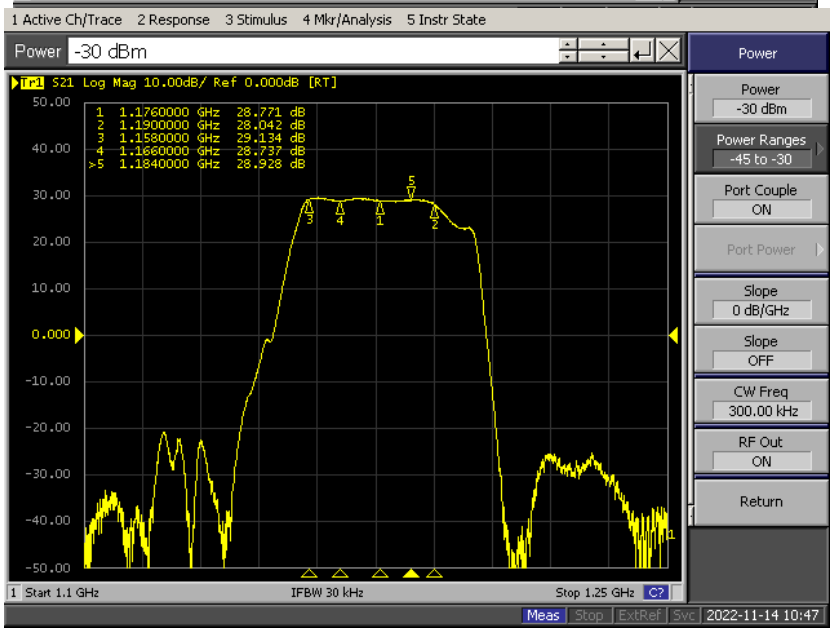

© 2022 LOCOSYS Technology Inc.

LOCOSYS

LOCOSYS Technology Inc.
20F.-13, No.79, Sec. 1, Xintai 5th Rd.,
Xizhi District, New Taipei City 221, Taiwan
☏ 886-2-8698-3698
886-2-8698-3699
www.locosystech.com

9. Overall Gain of active antenna

Test condition: 5m RG174 SMA Cable, Current 14mA @ 5V Voltage.

L1 Band Antenna RHCP Gain

Frequency (MHz)	Average Gain [dBic]	Peak Gain [dBic]
1559	24.06	28.43
1561	24.60	28.81
1563	25.07	28.13
1573	24.81	28.51
1575	24.50	28.34
1578	23.94	28.91
1598	24.67	28.39
1602	24.28	28.16
1606	23.00	28.09

L5 Band Antenna RHCP Gain

Frequency (MHz)	Average Gain [dBic]	Peak Gain [dBic]
1166	22.44	27.18
1168	22.85	27.55
1170	23.15	27.77
1172	23.38	27.93
1174	23.50	28.02
1176	23.39	27.93
1178	23.10	27.72
1180	22.60	27.32
1182	21.95	26.78
1184	21.21	26.12
1186	20.46	25.39

© 2022 LOCOSYS Technology Inc.